RS Fanfold VST

The RS Fanfold VST solution includes the RS52 Unwind, RS92 Folder and RS192 Vertical Stack Turner.

- **Space-saving vertical stacks**
- **Pinless fanfold**
- **Reduced form damage**
- **Improved productivity**
- **Quick job changeovers**

Fanfold that stacks up

With reliability you can count on and technology you can trust, the RS Fanfold VST is the perfect solution for all your fanfold and stacking needs. This system guarantees smooth transportation of forms to the inserter and minimizes manual handling of the forms, making it ideal for high-volume mailing applications.

The RS AutoLoad 92 solution features the pinless RS92 Folder, to eliminate waste caused by pinfed tractor holes. The folder offers automated forms loading for easy start-up and automatic form size changes. The RS192 Vertical Stack Turner stacks folded forms in a space-saving vertical format, reducing labor costs and improving productivity. The stack can be flipped to achieve the correct sequence (A-Z or Z-A) and forms can be easily removed and transported.

As with all of our products, the RS Fanfold VST solution is compatible with today's most advanced digital printers and can be adapted to meet your printing needs. Global service and around-the-clock support help ensure our reputation as the industry's reliability leader. Count on Lasermax Roll Systems to help you do more with digital print.

RS Fanfold VST

The RS Fanfold VST solution is comprised of the RS52 Unwind, RS92 Folder and RS192 Vertical Stack Turner. This solution fanfolds printed output, stacks and transports forms in a space-saving vertical format and is well suited for high-volume mailing applications.

The RS52 Unwind feeds a roll of paper into the printer for several hours of continuous, uninterrupted printing. The center-shaft driven RS52 Unwind handles a variety of media including lightweight paper, labels and coated stocks and offers consistent, reliable feeding.

Efficient fanfolds.

Printed material is then fed into the RS92 Folder which fanfolds 6˝-16˝ form lengths up to 19.5˝ wide and features automated forms loading for easy start-up. The RS92 Folder fanfolds pinless or pinfed output from web-fed digital printers and allows automatic form size changes with an unlimited number of form lengths.

Folded output then automatically enters the RS192 Vertical Stack Turner where forms are stacked in a space-saving vertical format. When forms have reached the top of the Vertical Stack Turner, the web is cut and forms are removed, or the stack is flipped to achieve the correct sequence (A-Z or Z-A). The RS192 Vertical Stack Turner creates stacks up to 30˝ high and helps to minimize manual handling.

Transfer to RS192.

Stacks can be flipped.

All components are modular, compact, and are designed to dramatically improve workflow.

Optional Capabilities

Web Vision™

Web Vision

Capture large, high-resolution images of the entire web with no operator adjustments. Web Vision reviews bar codes for readability, detects small image artifacts, and more.

MICRcheck™

Verify MICR print quality in-line.

Roll carts

Easily move, store and load paper rolls.

Specifications

Performance / Media

Speed Max.	360 ft/min	1.80 m/sec
Print	Simplex, Duplex	
Feeding	Pinfed or pinless	
Paper weight	15# bond–110# index	
	55–200 gsm	
Roll diameter	4"–52"	100 mm–1320 mm
Web width	6"–19.5"	155 mm–495 mm
Form length	6"–16"	155 mm–405 mm
Stack Height	30" (appr. 7,000 forms)	

Electrical

Power	208 VAC, 1 Phase, 15A, or
	200-240 VAC 50/60 Hz, 10A

Configuration Example

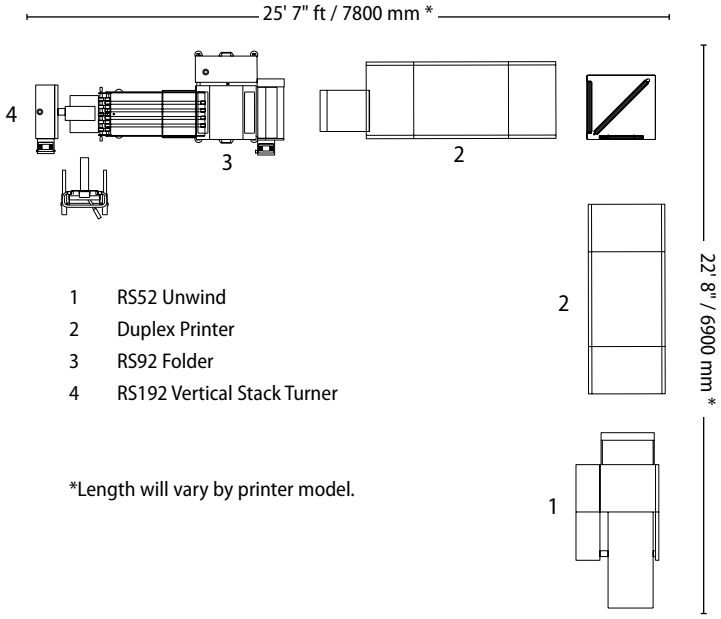

1 RS52 Unwind
2 Duplex Printer
3 RS92 Folder
4 RS192 Vertical Stack Turner

*Length will vary by printer model.

082508
©2008 Lasermax Roll Systems. All rights reserved. The Lasermax Roll Systems name and logo and MICRcheck, and Web Vision are trademarks of Lasermax Roll Systems. Lasermax Roll Systems reserves the right to make any technical amendments without prior notification.notification.

Lasermax Roll Systems

www.lasermaxroll.com

China	Shanghai	+86 216 2790792	info@lasermaxrollsystems.cn
	Beijing	+86 108 5804932	info@lasermaxrollsystems.cn
Singapore		+65 6793 9478	info@lasermaxroll.sg
Sweden		+46 372 256 00	info@lasermaxroll.se
United Kingdom		+44 179 370 7110	info@lasermaxroll.co.uk
USA		+1 781 229 2266	info@lasermaxroll.com